# Milano

## Flush Plate

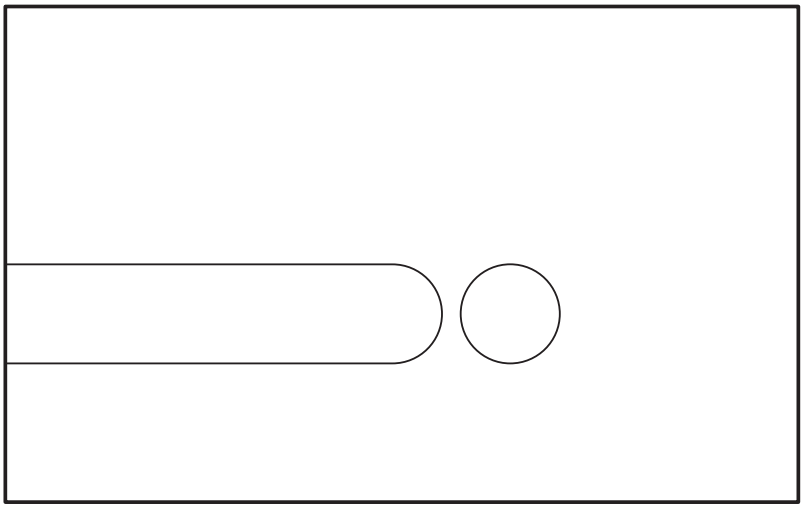

Installation Guide

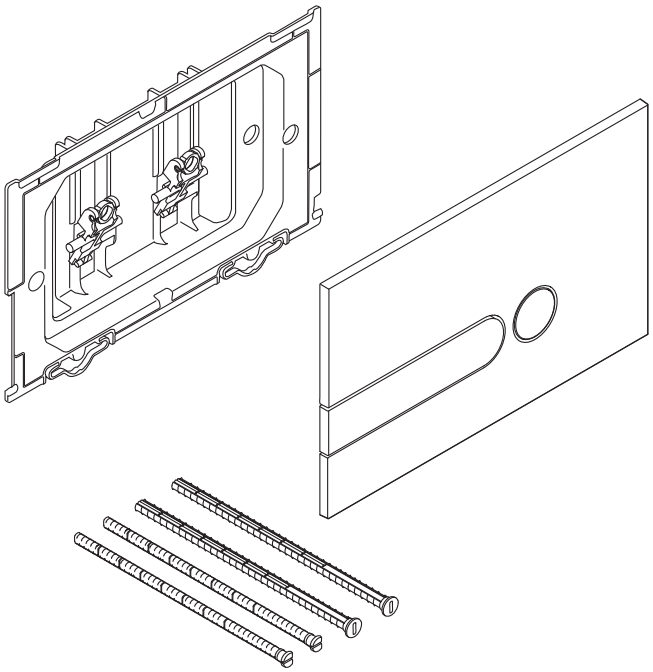

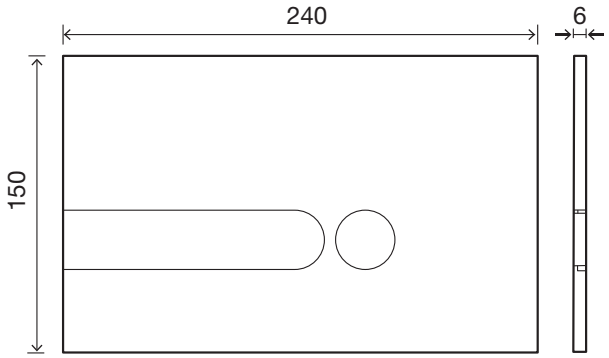


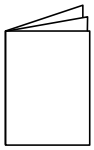

(dimensions in millimeters)

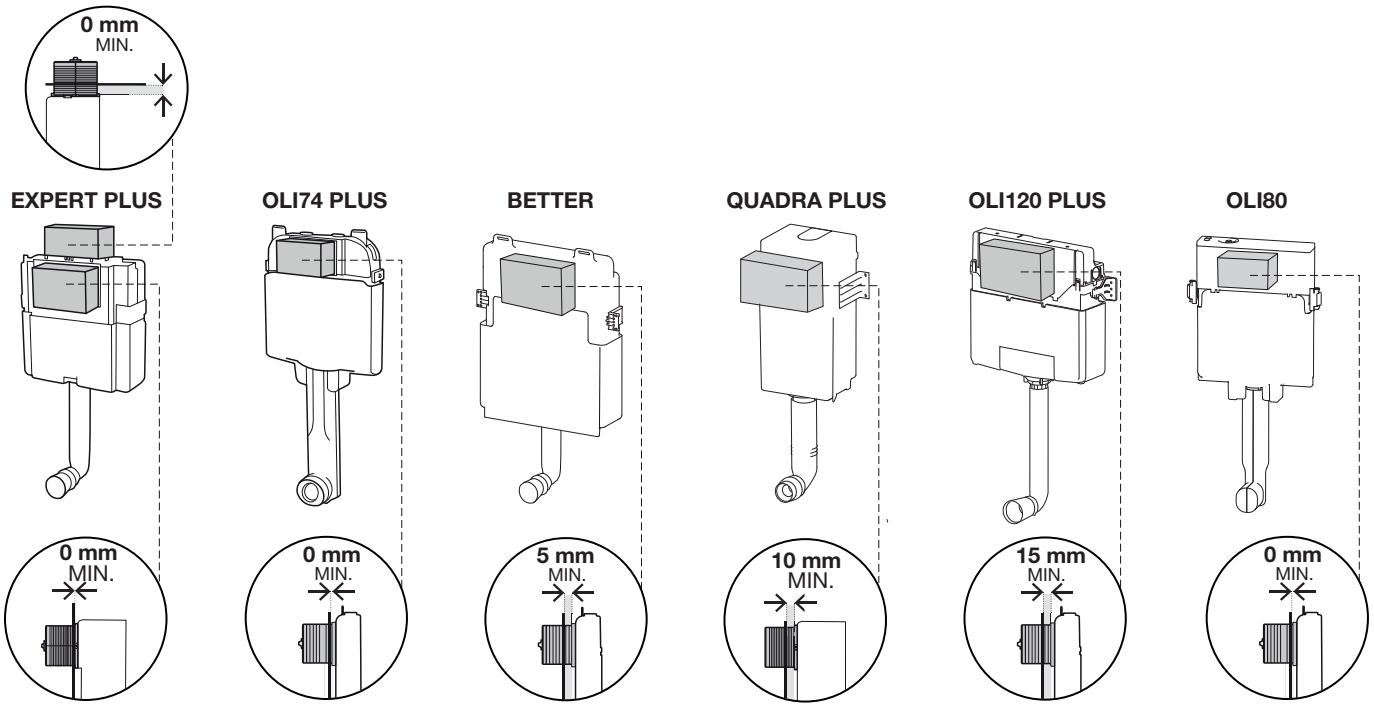

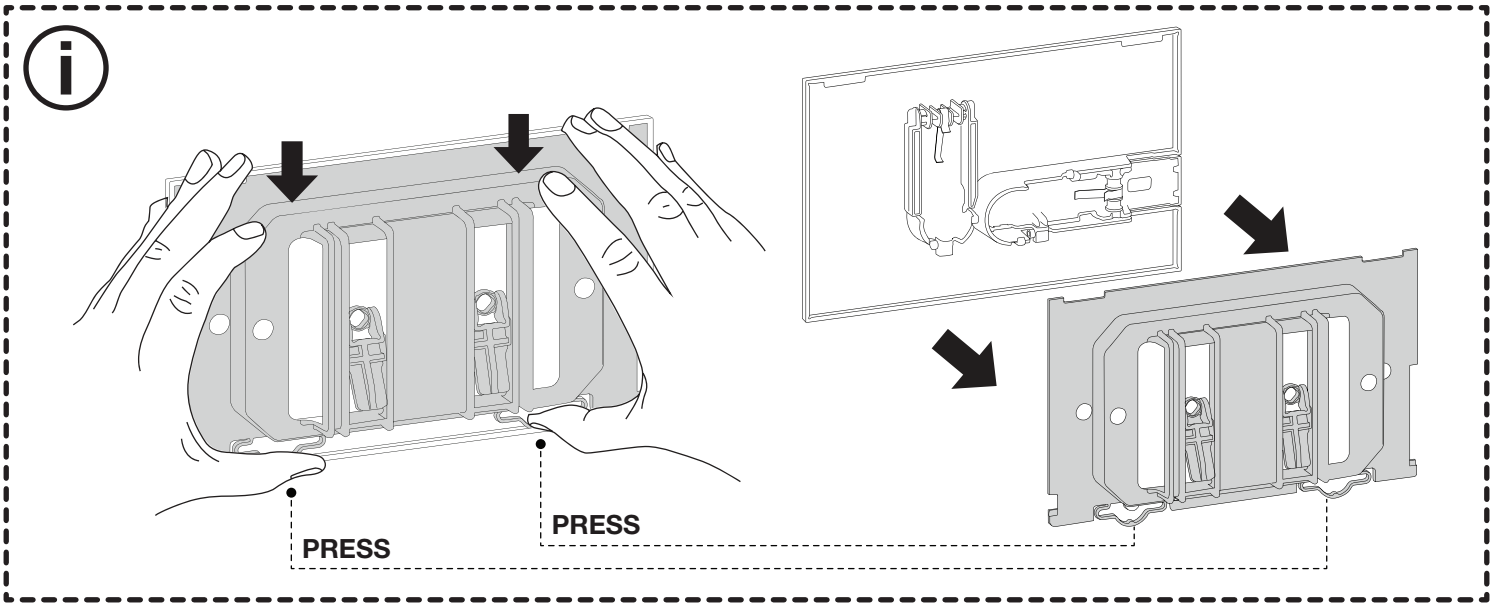


1

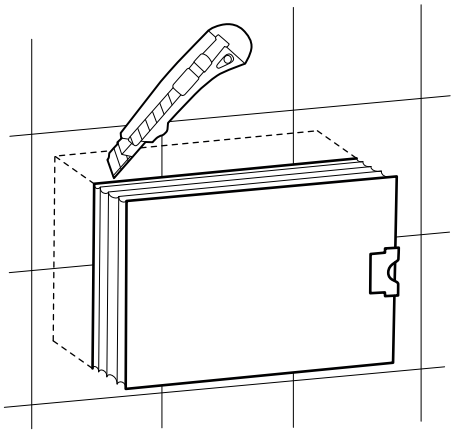


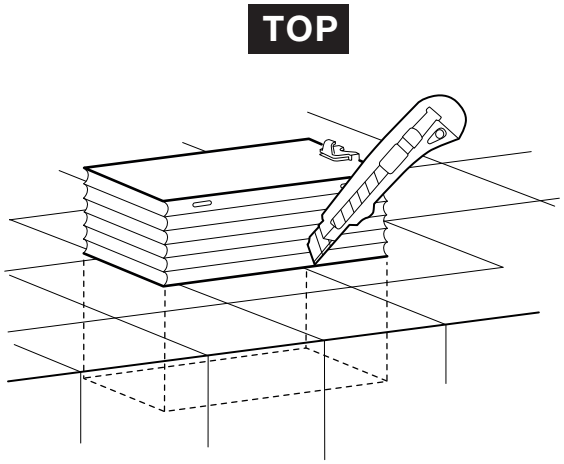


2

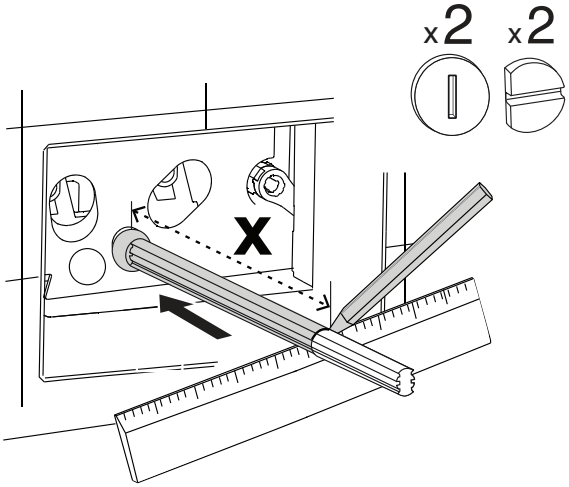


3

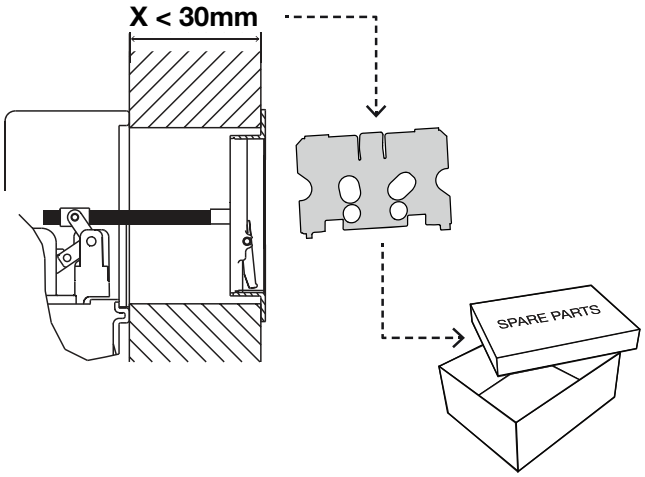

## 3

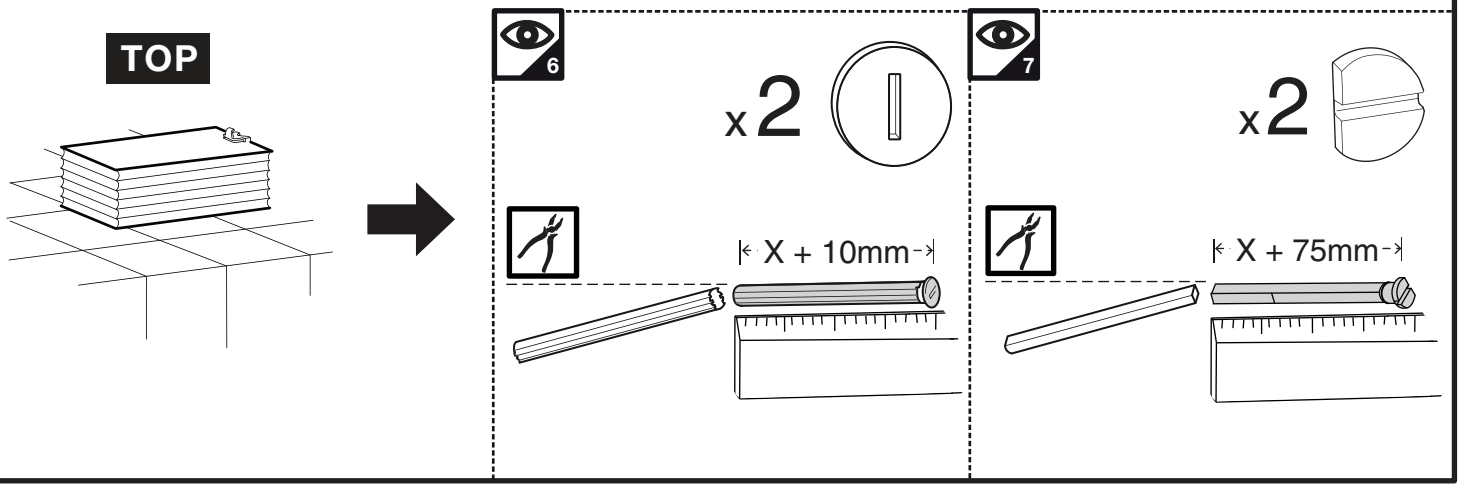


## 3

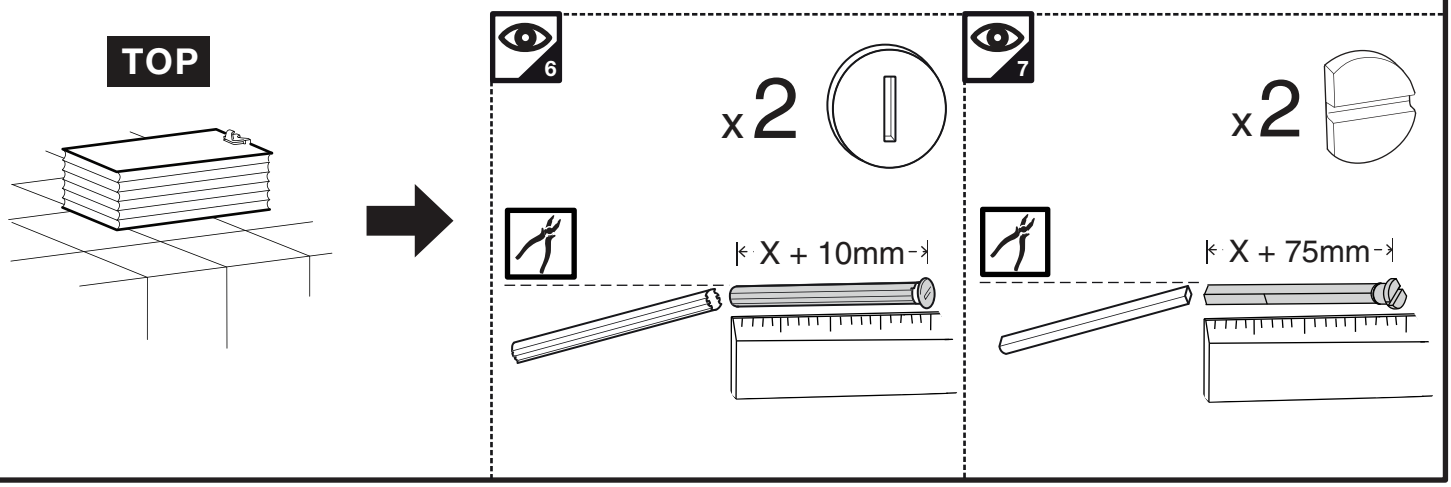


## 4

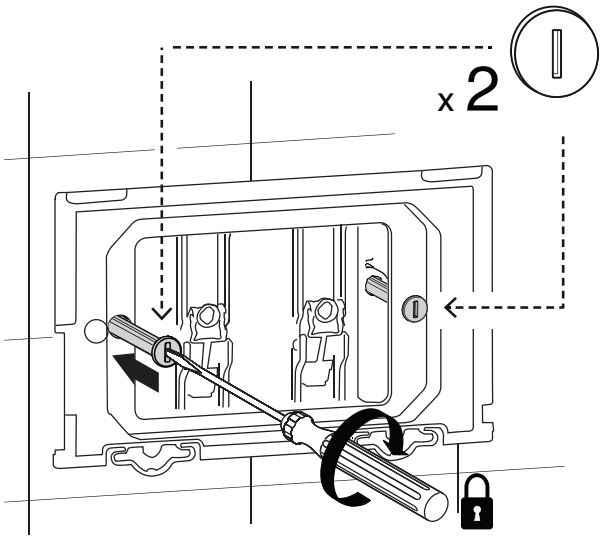

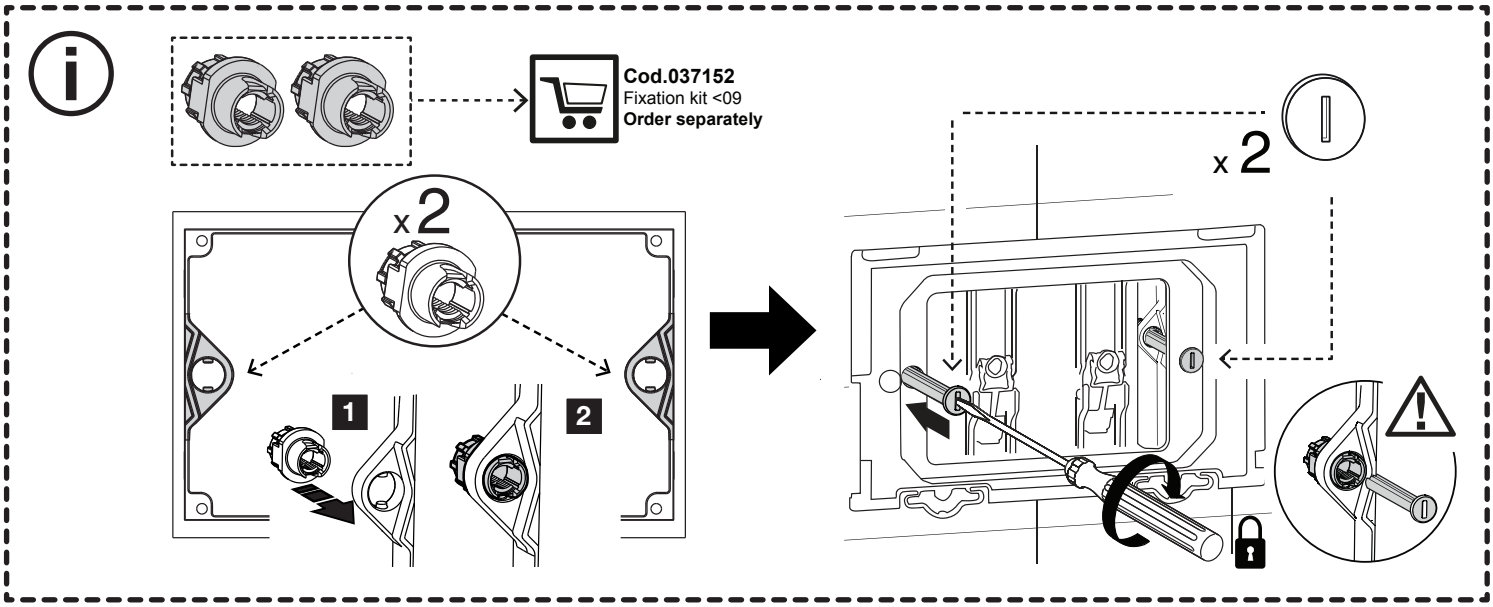


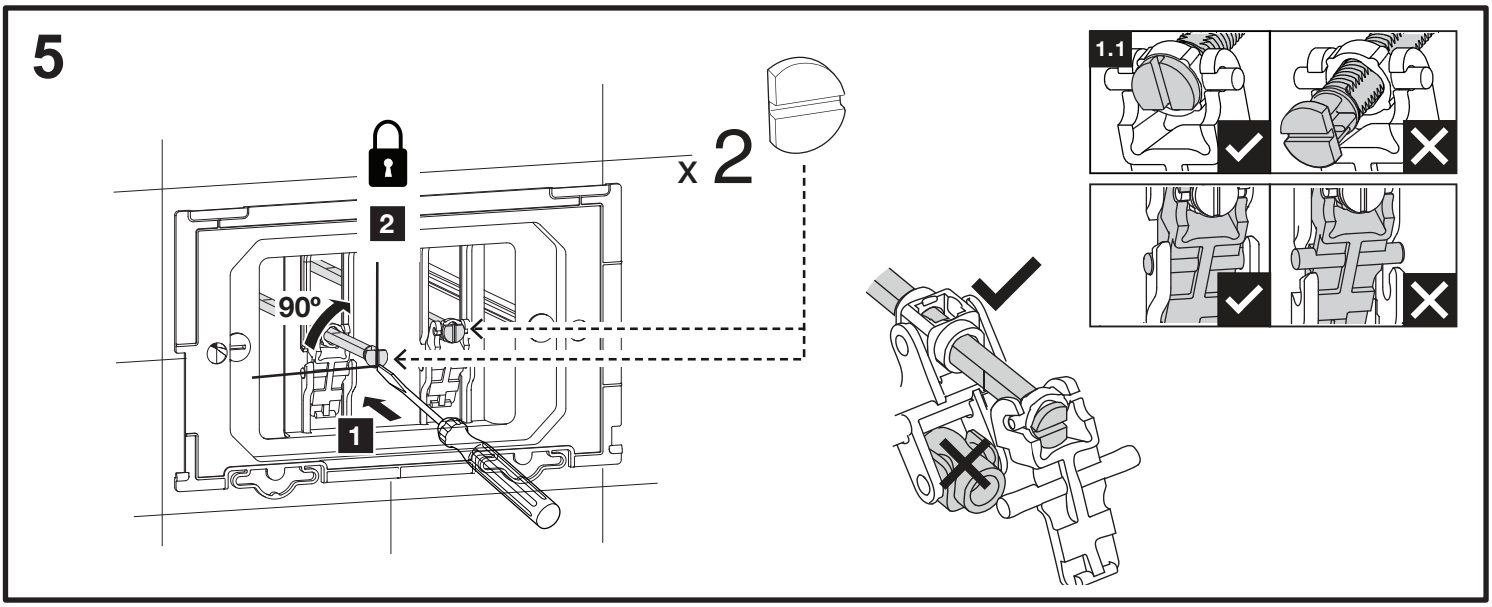


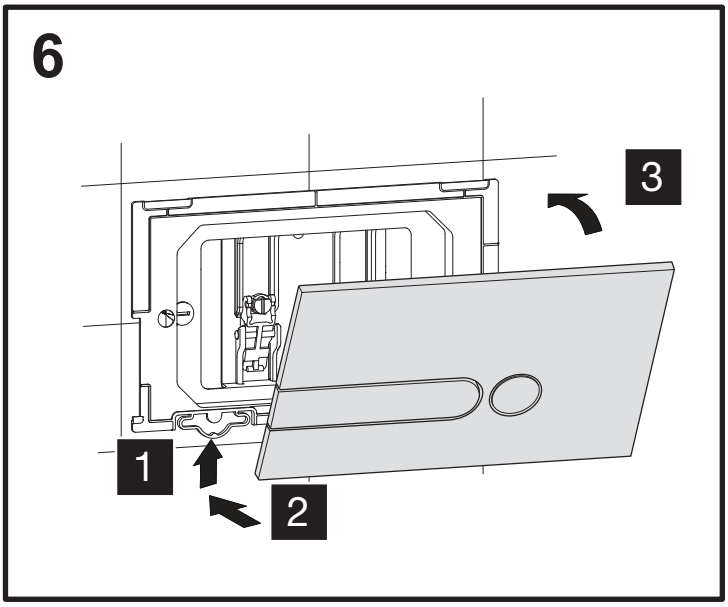


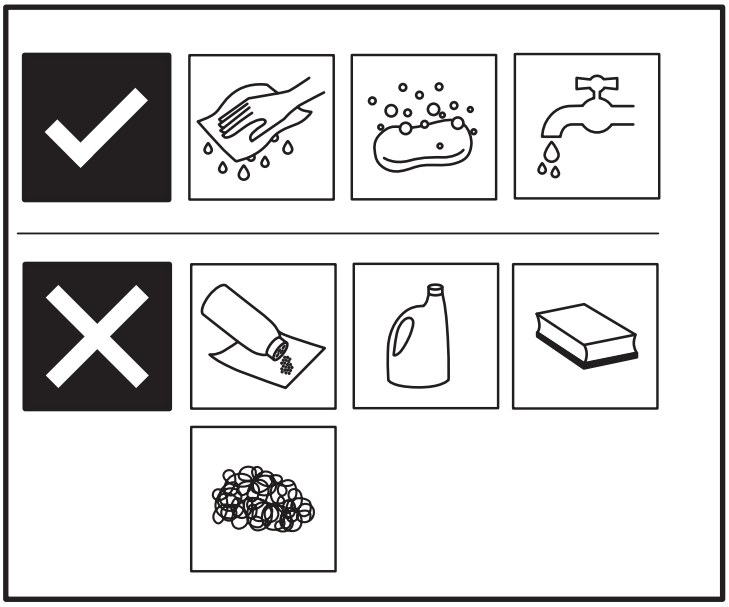

If you require any additional information or have any issues with this product please refer to the website.